13" x 17" x 9" Stainless Steel Sink With Drain Board

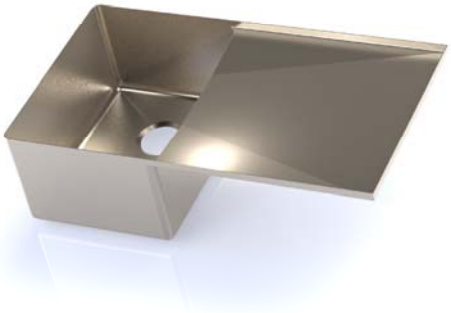

Available models:

SSSKDBR30416G13X17X09
- 304 (18-8) 16 gauge with drain board right

SSSKDBL30416G13X17X09
- 304 (18-8) 16 gauge with drain board left

SSSKDBR30414G13X17X09
- 304 (18-8) 14 gauge with drain board right

SSSKDBL30414G13X17X09
- 304 (18-8) 14 gauge with drain board left

SSSKDBR31616G13X17X09
- 316L (18-10) 16 gauge with drain board right

SSSKDBL31616G13X17X09
- 316L (18-10) 16 gauge with drain board left

SSSKDBR31614G13X17X09
- 316L (18-10) 14 gauge with drain board right

SSSKDBL31614G13X17X09
- 316L (18-10) 14 gauge with drain board left

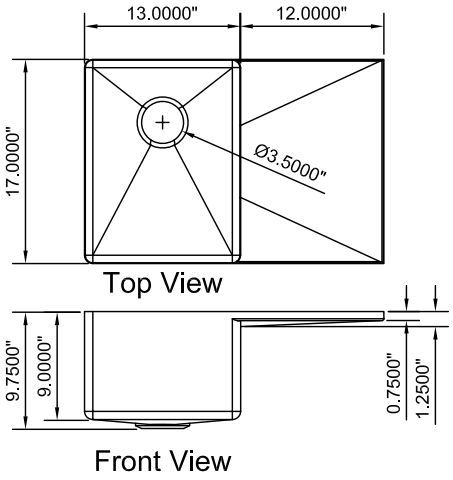

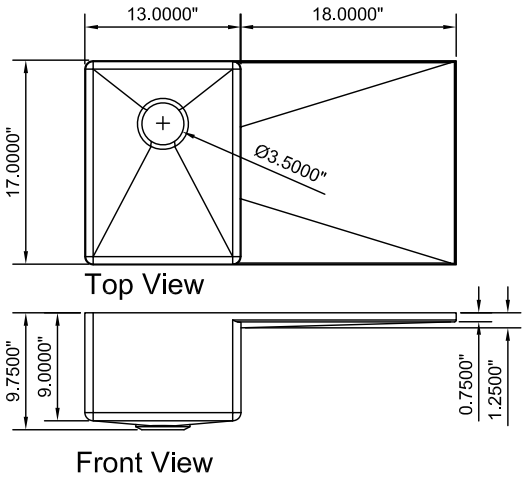

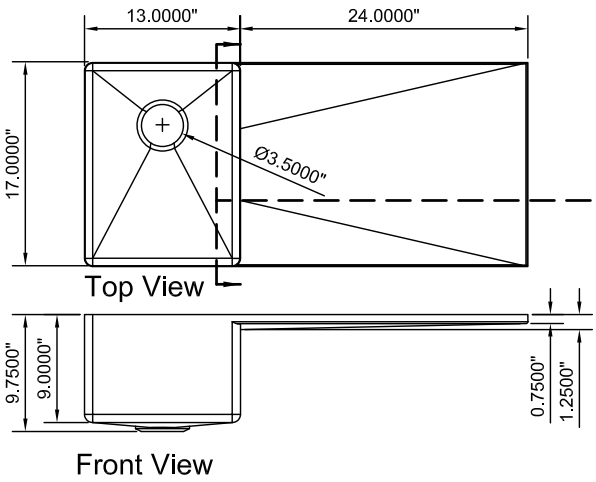

Features:
- Drain board section of sink will fit within our standard 1.5" counter top, requiring no additional base cabinet
- Drain board slopes to center towards sink bowl
- Constant perimeter depth enables level seating of optional cutting board (see Detail A)
- Brushed finish
- 5/8" radius corners
- Functional drain grooves
- Center, rear drain placement
- 3 1/2" drain opening

Bowl Size: 13" long x 17" wide*

Bowl Depth: 9"

Minimum cabinet size: 15"

*Length is left to right, width is front to back.

Available options:
- Poly cutting board (fits inside drain board)

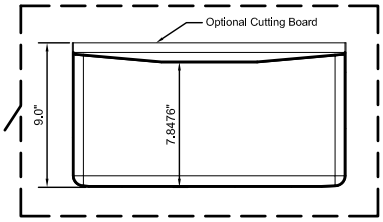

DETAIL A
Drain Board Section at Sink Connection with Optional Cutting Board In Place

Manufacturer of Architectural Materials
307 North Secrest Ave.
Monroe, NC 28110

Toll Free - (877) - 484 - 0088
Local - (704) - 635 - 2064
Fax - (704) 220-0208
www.stainlesssupply.com